PROXXON

MP 400

Manual

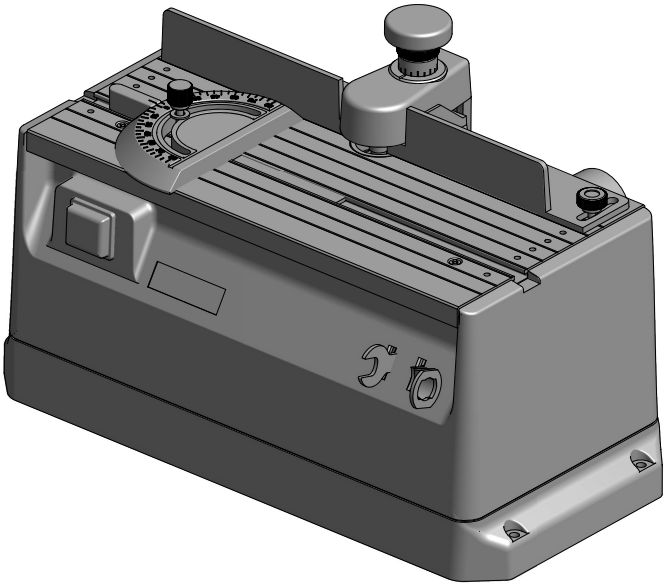

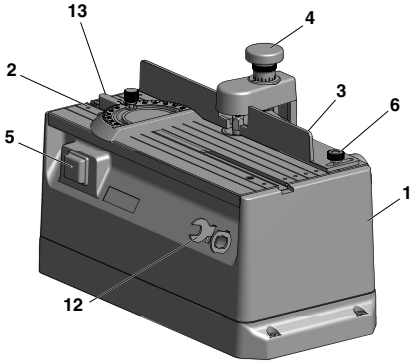

Fig. 1a

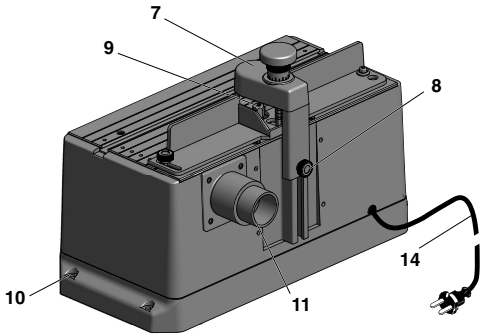

Fig. 1b

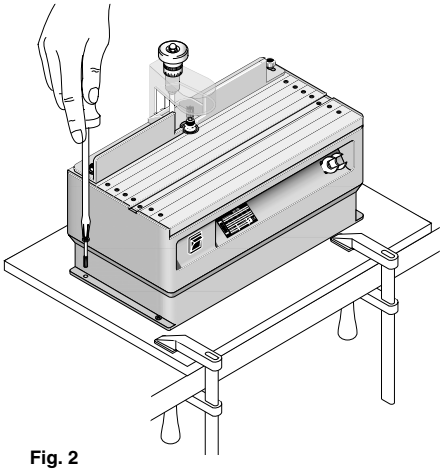

Fig. 2

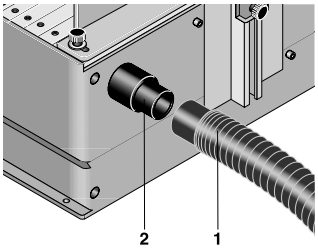

Fig. 2b

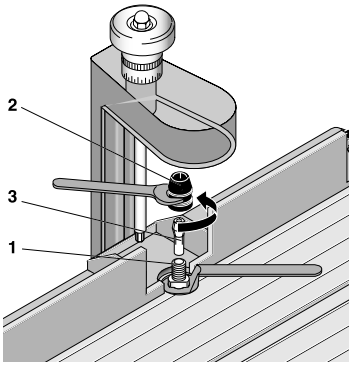

Fig. 3a

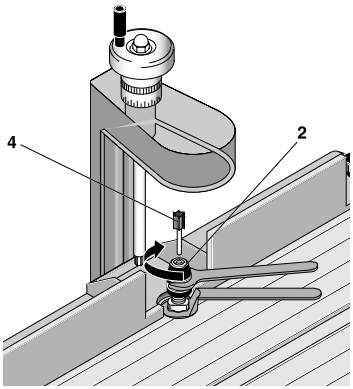

Fig. 3b

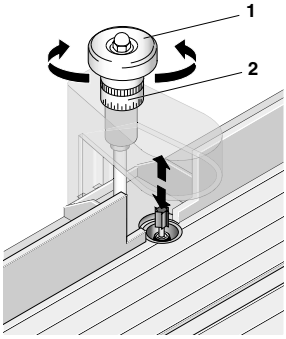

Fig. 4

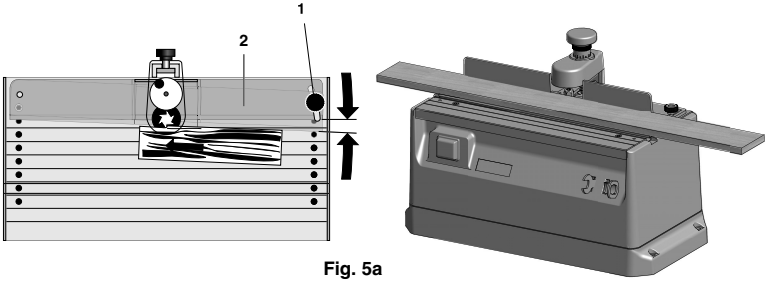

Fig. 5a

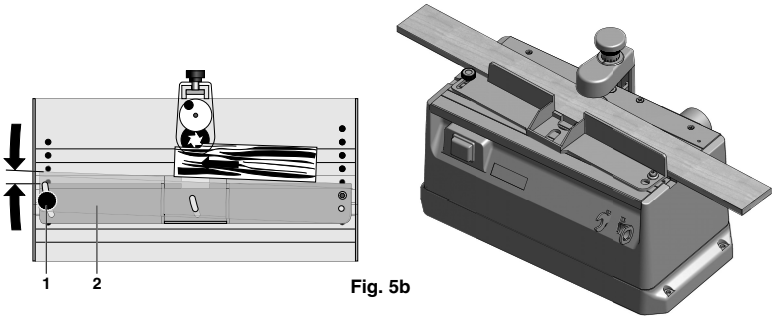

Fig. 5b

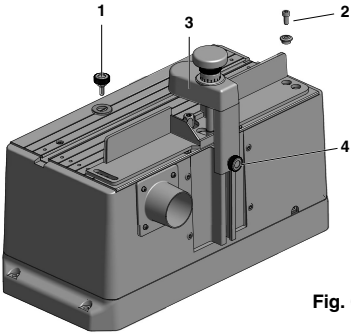

Fig. 6

Translation of the Original Operating Instructions MICRO Profiling device MP 400

Dear Customer,

The use of these instructions

- makes it easier to become acquainted with the device,
- prevents malfunctions due to improper handling, and
- increases the service life of your device.

Always keep these instructions close to hand. Only operate this device with exact knowledge of it and comply with the instructions.

PROXXON will not be liable for the safe function of the device for:
- handling that does not comply with the usual intended use,
- other application uses that are not stated in the instructions,
- disregard of the safety regulations,

You will not have any warranty claims for:
- operating errors,
- lack of maintenance.

For your safety, please comply with the safety regulations without fail.
Only use original PROXXON spare parts. All rights reserved for further developments in the course of technical progress. We wish you much success with the device.

Safety regulations:

Wear personal protective equipment and always wear protective goggles.
Depending on the type and use of the electrical device, wear personal protective equipment such as a dust mask, non-slip safety shoes, a helmet or hearing protection to reduce the risk of injuries. Wear a breathing mask if the work you do generates dust.

If dust extractors and collectors can be installed, then ensure that these are connected and used correctly.

The use of these devices reduces the hazards that dust poses.

General view (fig. 1):

1. Housing
2. Table
3. Limit stop
4. Hand wheel for profiling height adjustment
5. On-off switch
6. Locking screw for limit stop
7. Guard
8. Locking screw for tool protection
9. Profiler
10. Fastening bores
11. Suction connection
12. Spanner holder
13. Angle stop
14. Mains cable

Description of the machine:

For profiling, slotting, chamfering, trimming, separating, etc. Your MP 400 enables, e.g., precise machining of sides and long sections such as for doors, flaps and housing parts.

The profiling tool is height-adjustable:
On a dovetail guide, the carriage with the drive unit can be set precisely with the help of the scaled hand wheel (one revolution is a 1 mm height difference, i.e., one scale graduation line is 0.05 mm). While working, this helps you to slowly and very accurately “feel” your way towards the required profile depth as needed. The spindle is manufactured precisely and has a double ball bearing.

The see-through guard can be adjusted in height, thus making it possible to adjust it to the work piece thickness; it also functions as a hold-down.
Additional flexibility is offered by an angle stop and a longitudinal stop. This can be used on either side of the profiling tool on the work table. This makes it possible to machine a large width area of the work piece. Also ideal for broader strips or boards.

Scope of delivery:

1 pc. Profiling device
2 pcs. Spanners
1 pc. Suction connection
1 pc. Angle stop
3 pc. Collets

Technical Data:

Voltage:	220 - 240 V, 50 Hz, ~
Capacity:	100 watt 10 min
Working speed:	25000 rpm
Dimensions:	340 x 160 x 180 mm
Weight:	approx. 2.6 kg
Tool shank diameter:	up to 3.2 mm
Sound power level:	104 dB(A)
Work piece height/thickness:	40 mm

You must wear hearing protection while working!

Only for use in dry rooms

Do not dispose of the electrical device in the household waste!

Operation:

Before work:

Fastening the profiling device (Fig. 2):

Before beginning work, fasten the profiling device to a sturdy wood board with the matching screws.

There are drill holes in the housing bottom of the device. The wood board can then be fixed to a table using screw clamps, for example.

Connecting the vacuum cleaner (Fig. 2b):

Caution!

Connect the dust extractor!
It is recommended to always work with dust extraction.

Insert the vacuum hose 1 of the vacuum cleaner into the connecting piece 2.

Inserting and replacing the profiling tool:

Caution!

For all work described below, it is advisable to position the height-adjustable safety mechanism (see Fig. 1, item 7) all the way up. Disconnect the mains plug!

Inserting the profiling tool:

Caution!

Make sure that the profiler is suitable for speeds up to 25,000 revolutions per minute.

1. Hold the output shaft 1 (see Fig. 3a) with the included open-end spanner and use the other spanner to unscrew and remove the swivel nut 2.
2. Insert the appropriate collet 3 into the opening of the shaft and screw the swivel nut back on, but do not tighten!
3. Insert the matching profiler 4 (Fig 3b).
4. Tighten the swivel nut as shown in Fig. 3b.

Replacing the tool:

1. As shown in Fig. 3b, loosen the swivel nut, but do not unscrew it.
2. Remove the profiler 4
3. Insert a new profiler.
4. Re-tighten the swivel nut

Caution!

Please note that the shank diameter must always correspond to the inside diameter of the collets! If the collet must be replaced for this reason, then proceed as previously described in “Inserting the profiling tool”.

Height adjustment:

Before the profiling process, the height of the profiler must be adjusted. Turn the hand wheel 1 (Fig. 4) to do so.

Turn to the right: profiler moves up, turn to the left: profiler moves down.

To precisely achieve the desired depth for your profile, the scale ring 2 can be set to zero:

1. Simply turn the hand wheel 1 to set the profiler to a height where it just barely touches the work piece.
2. Hold the hand wheel and turn the zero position of the scale ring to the marking on the profiling guard. The required profile depth can now be precisely set with the hand wheel in compliance with the numerical values on the scale ring.

Please also note: One full revolution of the hand wheel corresponds to a traverse path of 1mm, twisting by one graduation line causes a height adjustment of 0.2 mm!

Adjusting the longitudinal stop (Fig. 5 and 6):

In the position shown in Fig. 5a, the limit stop is suitable for manufacturing chamfers or slots in the front side of strips.

1. Loosen knurled screw 1
2. Turn longitudinal stop 2 to set the desired distance
3. Retighten knurled screw

If slots or the like will be made in wider strips or boards, the longitudinal stop can also be mounted in the position as shown in Fig. 5b.

To remount the longitudinal stop, please proceed as follows:

Caution!

It may be necessary to remove the guard (Item 3, Fig. 6) for this. To do so, release knurled screw 4 and pull up the guard to remove.
When replacing the guard, make sure you push the square nut properly into the rail of the aluminium profile so that you correctly “hit” the hexagon socket head of the spindle in the work table of the profiling device with the spring-mounted hexagon at the miller guard!

1. Completely unscrew the knurled screw and the Allen screw 1 and 2 (Fig. 6) and remove together with the associated discs and the bushing.
2. Roughly estimate the distance to the profiler; the longitudinal stop can be screwed into the matching threaded holes in the work table in the position as shown in Item 3. Do not forget the bushing and the disc. Do not tighten the knurled screw at first!
3. Fine adjustment may now be done as described earlier under “Adjusting the longitudinal stop”.

Angle stop (Fig. 1, Item 13):
This stop can be inserted into the designated slot; it can be moved back and forth here. To adjust, release the knurled nut and turn the plastic element.

Working with the Micro profiler:

Caution!

Always wear hearing protection when working!

Caution!

Never work without the protective device (Item 7, Fig 1) !

The guard must be adjusted so that it covers the milling cutter closely over the work piece. Use extreme care when profiling work pieces over 5 mm height/thickness.

Never reach into the rotating tool!

The work piece must only be so long and wide so that it still fits on the work table and can be easily guided (max. approx. 200 mm x 500 mm). The maximum chip thickness should never exceed 1 mm.

To manufacture the profile, the work piece is allowed to glide along the limit stop as shown in as in Fig. 5.
You must make sure that the profiling infeed (the removal) and the push speed are not too great! Too much removal and a too great push speed will lead to bad milling results and strain the machine mechanics unnecessarily.
Instead, make several operating passes and readjust the limit stop or the profiling height several times.

Caution!

It is recommended to always work with dust extraction. A rubber suction connection at the rear of the device has been provided for this purpose. You can easily connect a vacuum cleaner here.

A tip on this matter:
When using the Proxxon CW-matic vacuum cleaner, manual switching on and off is no longer necessary. The CW-matic is fitted with an automatic control device which switches on and off automatically when the power tool is switched on and off.

Care and maintenance:

Caution!

Have defective individual components replaced by a specialist only.

Caution!

Always unplug the mains plug during repair and adjusting work!
The profiling device is primarily maintenance free. For a long service life, you should clean your device after every use with a vacuum cleaner or a soft cloth. Please always use the suction device.

Disposal:

Do not dispose of the device in the household waste! The device contains materials that can be recycled. If you have questions concerning this topic, please contact your municipal disposal company or other appropriate municipal institutions.

EU conformity declaration

Name and address of the manufacturer:
PROXXON S.A.
6-10, Härebierg
L-6868 Wecker

Device designation: MICRO Profiling device MP 400
Article No.: 27050

We declare that the products described meet the provisions of the following EU guidelines:

EU EMC Directive 2004/108/EC
Applied standards: DIN EN 55014-1 / 02.2010
DIN EN 55014-2 / 06.2009
DIN EN 61000-3-2 / 03.2010
DIN EN 61000-3-3 / 06.2009

EU Machinery Directive 2006/42/EC
Applied standards: DIN EN 61029-1 / 01.2010

12.03.2012

Dipl.-Ing. Jörg Wagner

PROXXON S.A.
Appliance Safety Division

The CE document authorized agent is identical with the signatory.

PROXXON MP 400

ET - Nr.:	Description
27050 - 04	Longitudinal stop
27050 - 05	Miller protection
27050 - 07	Guide
27051 - 08	Shaft housing
27050 - 09	Shaft
27050 - 10	Bushing
27050 - 13	Hexagon
27050 - 14	Hand wheel
27050 - 16	Bushing for stop
27050 - 17	Square nut
27050 - 18	Lining plate
27050 - 21	Spring
27050 - 23	Switch
27050 - 25	Ball bearing
27050 - 26	Retaining ring
27050 - 27	Nut
27050 - 28	Spindle
27050 - 29	Set screw
27050 - 30	Cylinder head screw
27050 - 31	Washer
27050 - 32	Knurled screw
27050 - 33	Cylinder head screw
27050 - 34	Cylinder head screw
27050 - 35	Screw
27050 - 36	Screw for casing
27050 - 38	Anti-kink-sleeve
27050 - 39	Strain relief
27050 - 40	Fastening screw
27050 - 41	Screw for fastening plate
27050 - 42	Screw
27050 - 43	Screw
27050 - 45	Toothed belt
27050 - 46	Graduated collar
27050 - 47	O-Ring
27050 - 48	Fastening screw
27050 - 49	Felt disk
27050 - 50	Corrugated washer
27050 - 51	Set screw

ET - Nr.:	Description
27050 - 52	Washer
27050 - 53	Stop nut
27050 - 55	Union nut
27050 - 56	Label
27050 - 57	Adaptor
27050 - 58	Spanner
27050 - 59	Collets (set)
27050 - 60	Mitre gauge
27050 - 61	Nut
27050 - 62	Washer
27050 - 63	Spacer bolt
27050 - 64	Board
27050 - 65	Grounding screw
27050 - 66	Toothed washer
27050 - 68	Cranked wrench
27050 - 69	Power cord
27050 - 73	Drive pulley, small
27050 - 74	Fastening screw
27050 - 75	Motor fastening plate
27050 - 76	Motor
27050 - 77	Drive pulley, small
27050 - 79	Set screw
27050 - 80	Washer
27050 - 81	Vacuum cleaner connection
27050 - 82	Wiring Motor
27050 - 83	Cable Strap
27050 - 84	Extraction hose
27050 - 85	Screw
27050 - 86	Hose
27050 - 87	Upper part of housing
27050 - 88	Wiring Switch
27050 - 89	Downer part of housing
27050 - 90	Screw
27050 - 91	Working table
27050 - 92	Mitre gauge
27050 - 97	Carton box (not shown)
27050 - 99	Manual and Safety Instructions (not shown)

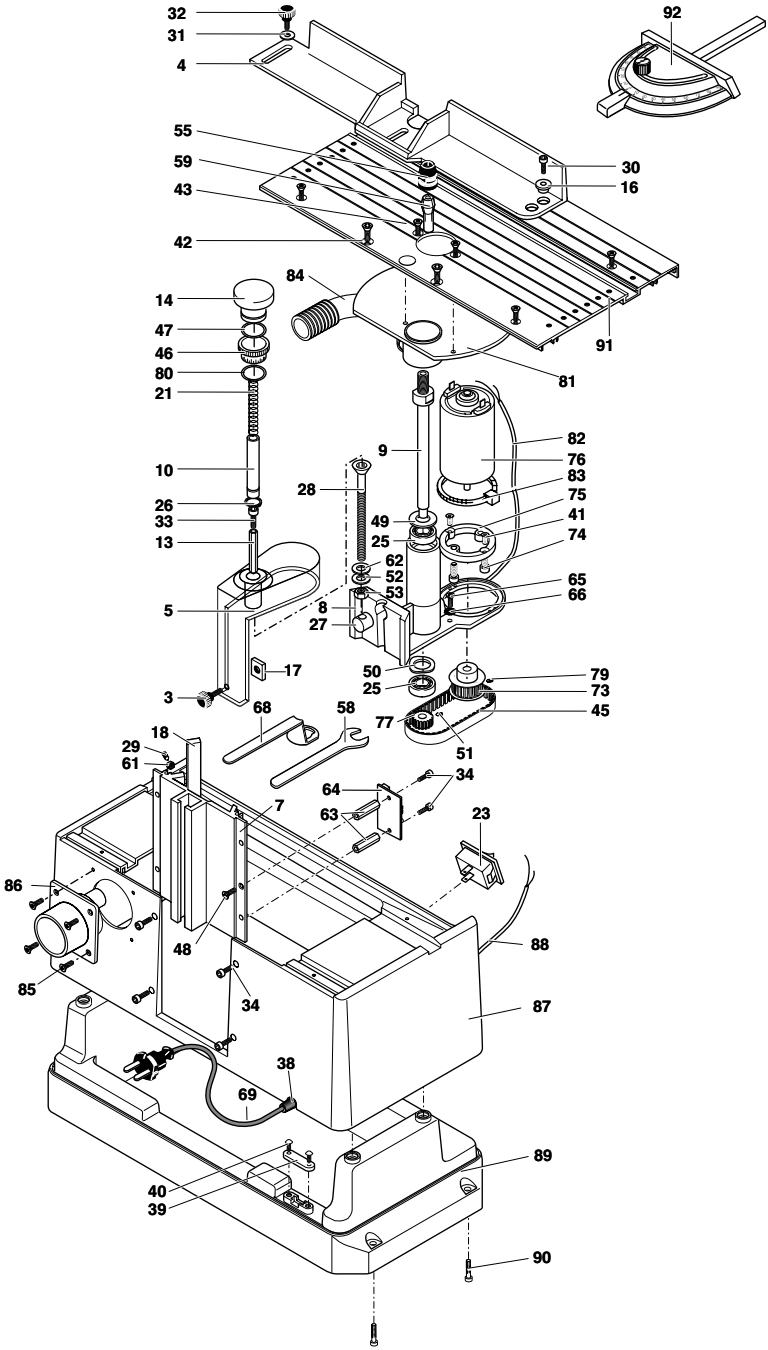
32
31
4
92
55
59
43
42
30
16
84
14
47
46
80
21
91
81
82
9
76
10
83
28
75
26
33
49
41
13
25
74
62
52
65
53
66
8
5
27
17
50
79
25
73
3
68
58
45
77
51
18
29
61
34
64
7
63
23
86
48
88
85
34
87
38
69
89
40
39
90